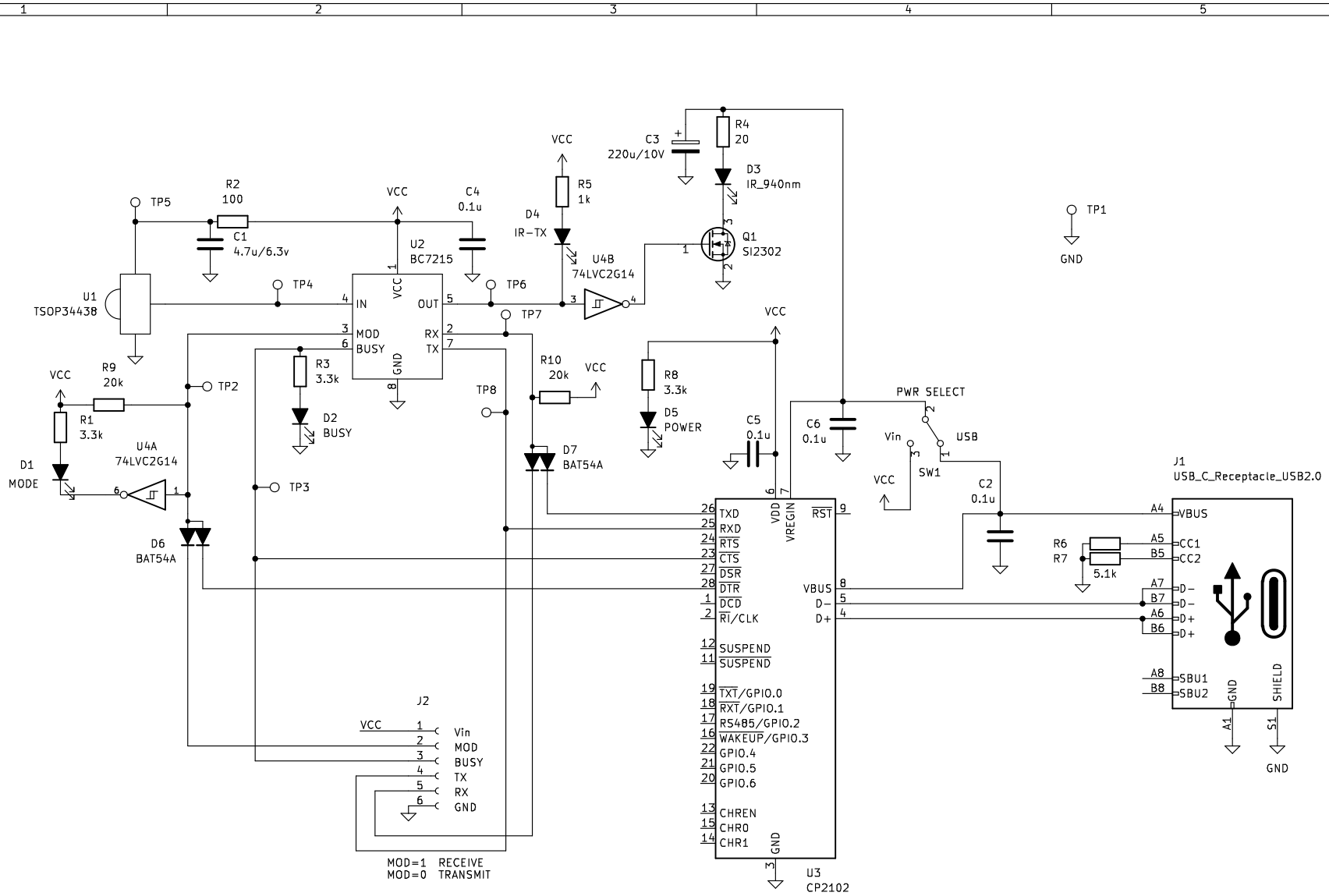

Bitcode

Title: BC7215 Demo Board

Size: A4	Date:	**Rev: V4.1**
		Id: 1/1