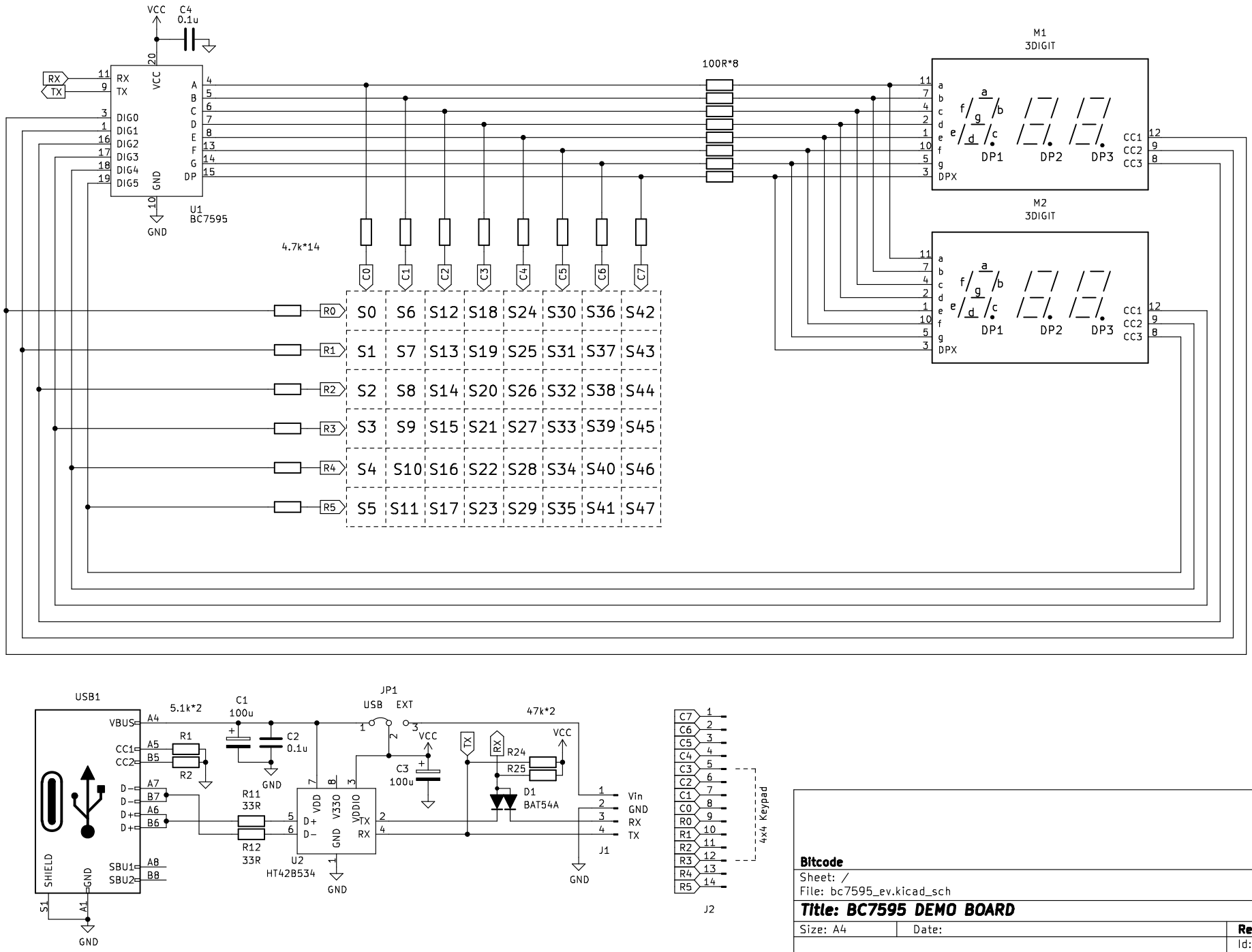

Bitcode

Sheet: /

File: bc7595_ev.kicad_sch

Title: BC7595 DEMO BOARD

Size: A4	Date:	**Rev: 1.0**
		Id: 1/1